MORA OVENS

MULTIPURPOSE ELECTRIC PIZZA OVENS

- 8 Sizes avalaible
- Reliable Pizza ovens
- High quality materials
- Perfect baking results
- Low power requirements
- Heavy duty insulation

MANUFACTURED IN SKÖVDE CITY IN SWEDEN

- **Bakes all types of Pizzas:** Romana , New york style, Neapolitan , Swedish style
- **Cooks and grills all food types:** Lasagna , Grilled meat ,Slow cooking in pan
- **Bakes fantastic bread:** Flatbread, Pannini, sourdaugh bread , Baguettes and much more

MADE IN SWEDEN

MORA OVENS AB
LILLEBOVÄGEN 1 ,54965 SKÖVDE ,SWEDEN
+46 500 435 000 / INFO@MORAOVENS.SE

CE

MORA OVENS

MULTIPURPOSE ELECTRIC PIZZA OVENS

STANDARD PANEL	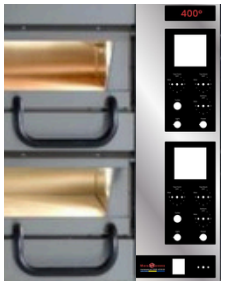	SMART TOUCH SCREEN CONTROLLER	
Compact 35 cm Pizza 54 cm deep		MODELS P10-P20-P30 • For Food trucks and • restaurants with smaller volumes • small space required	Sides 3-8
Medium S= 35 cm L= 40 cm Pizza S = Small 74 cm deep L = Large 82 cm deep		MODELS P50S and P50L • All-round model, • multipurpouse for small to medium • sized restaurants.	Sides 9-11
For big Pizzas 40 cm 35 cm Pizza	 82 cm deep	MODELS P40-P70-P90 • Pizzerias • Restaurants with higher volume needs • 40cm Pizzas	Sides 12-21
For Pizzas 35 cm 35 cm Pizza	 74 cm deep	MODELS P60-P80 • Pizzerias • restaurants with highier volume needs • 35 cm Pizzas	Sides 18-21

MADE IN SWEDEN

MORA OVENS AB
LILLEBOVÄGEN 1 ,54965 SKÖVDE ,SWEDEN
+46 500 435 000 / INFO@MORAOVENS.SE

CE

MORA OVENS

Export pricelist Euro

P10 COMPACT / TABLE TOP

- 2 Pizza a 41 cm
- Dimentions WD 1160x590 baking surface **740x414 mm**
- Can be ordered as High temp.

2 PIZZA 41 CM

MODEL P11

1 LEVEL
2 PIZZA
30 PIZZAS / HOUR

5 574 Euros

MODEL P12

2 LEVELS
4 PIZZA
60 PIZZAS / HOUR

ALWAYS ON STOCK!

7 337 Euros

MODEL P13

3 LEVELS
6 PIZZA
60 PIZZAS / HOUR

9 869 Euros

EXTRAS

Touch screen / price per deck Max 450 degrees	580 Euros
Week timer /price per oven	160 Euros
Pullout shelfe with guides	340 Euros
Hood / price per oven	220 Euros
High temp 500 degrees / Price per deck	360 Euros
Biscotti di Sorrento stones /Price per deck	280 Euros

MADE IN SWEDEN

MORA OVENS AB
LILLEBOVÄGEN 1 ,54965 SKÖVDE ,SWEDEN
+46 500 435 000 / INFO@MORAOVENS.SE

CE

MORA OVENS

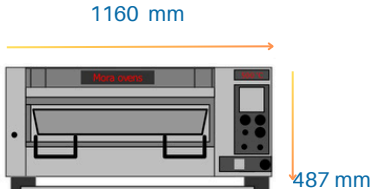

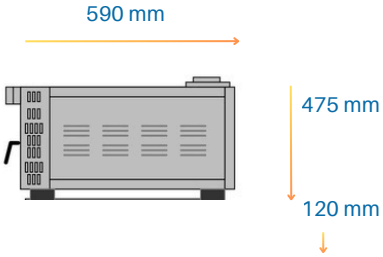

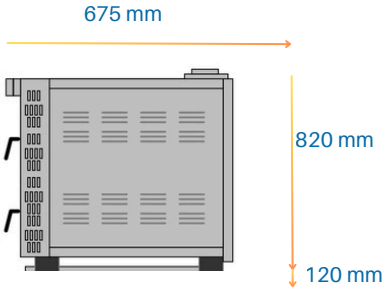

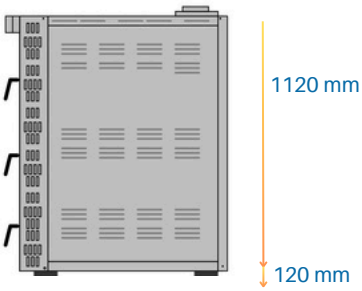

Model	Decks	Voltage -Power	Stones	Baking surface	Max temp
P11	1	3f/400v/4 Kw 3f/400v/4,8 Kw as 500°C	1	1x740x414	0-400 °C 0-500 °C
P12	2	3f/400v/8 Kw 3f/400v/9,6 Kw as 500°C	2	2x740x414	0-400 °C 0-500 °C
P13	3	3f/400v/12 Kw 3f/400v/14,4Kw as 500°C	3	3x740x414	0-400 °C 0-500 °C

MORA OVENS AB
LILLEBOVÄGEN 1 ,54965 SKÖVDE ,SWEDEN
+46 500 435 000 / INFO@MORAOVENS.SE

MORA OVENS

Export pricelist Euro

P20 COMPACT 75 CM DEEP

- 2 Pizza a 35 cm or 1 Pizza a 52 cm per Deck
- Dimentions WD 1160x750 baking surface **740x540 mm**
- Can be ordered as High temp.

2 PIZZA 35 CM

MODEL P21

1 LEVEL
2 PIZZA
30 PIZZAS/HOUR

6 074 Euros

MODEL P22

2 LEVELS
4 PIZZA
60 PIZZAS/HOUR

ALWAYS ON STOCK!

8 538 Euros

MODEL P23

3 LEVELS
6 PIZZA
60 PIZZAS/HOUR

10 469 Euros

EXTRAS

Touch screen / price per deck Max 450 degrees	580 Euros
Week timer /price per oven	160 Euros
Stand with 2 shelves and cators / price per oven	880 Euros
Hood / price per oven	280 Euros
High temp 500 degrees /Price per deck	360 Euros
Biscotti di Sorrento stones /Price per deck	330 Euros

MADE IN SWEDEN

MORA OVENS AB
LILLEBOVÄGEN 1 ,54965 SKÖVDE ,SWEDEN
+46 500 435 000 / INFO@MORAOVENS.SE

CE

MORA OVENS

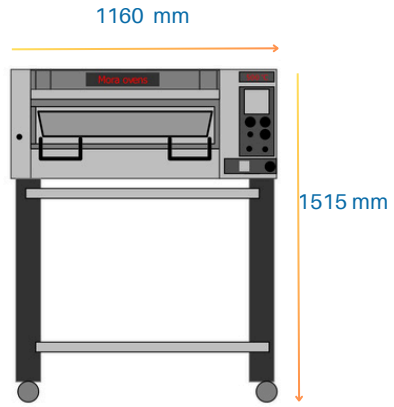

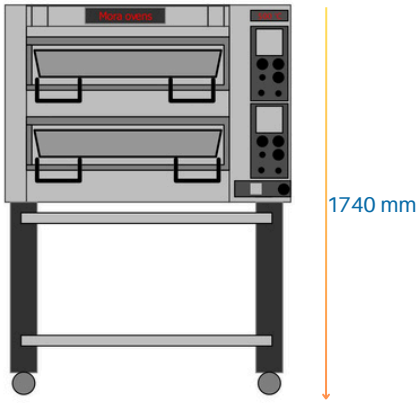

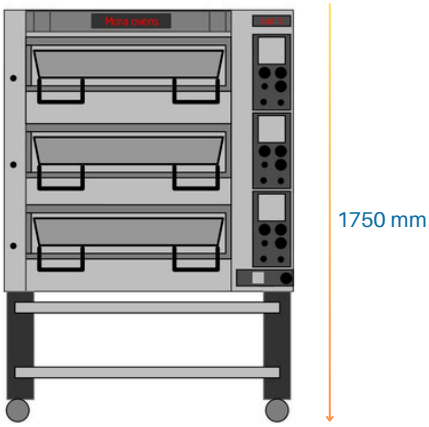

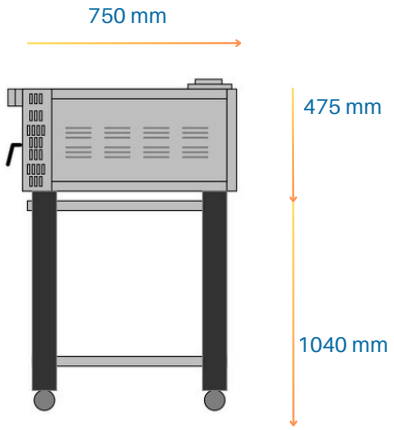

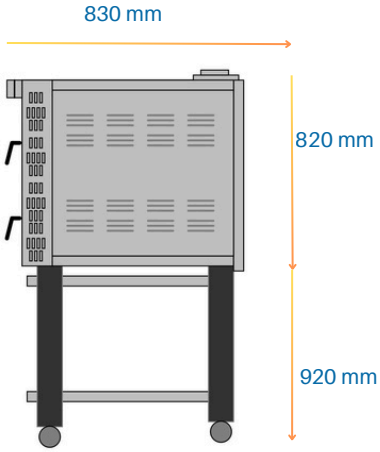

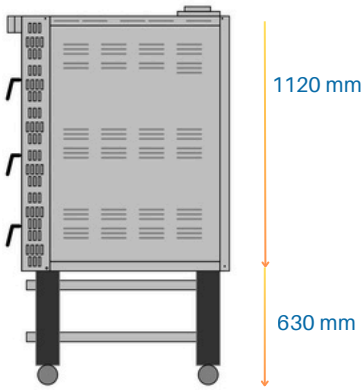

Model	Decks	Voltage -Power	Stones	Baking surface	Max temp
P21	1	3f/400v/5,4 Kw	2	1x740x540	0-400 °C 0-500 °C
P22	2	3f/400v/10,8 Kw	4	2x740x540	0-400 °C 0-500 °C
P23	3	3f/400v/16,2 Kw	6	3x740x540	0-400 °C 0-500 °C

MORA OVENS AB
LILLEBOVÄGEN 1 ,54965 SKÖVDE ,SWEDEN
+46 500 435 000 / INFO@MORAOVENS.SE

MORA OVENS

Export pricelist Euro

P30 COMPACT 75 CM DEEP

- 3 Pizza a 35 cm or 2 Pizza a 52 cm per Deck
- Dimentions WD 1485x750 baking surface **1060x540 mm**
- Can be ordered as High temp.

3 PIZZA 35 CM

MODEL P31

1 LEVEL
3 PIZZA
50 PIZZAS /HOUR

7 580 Euros

MODEL P32

2 LEVELS
6 PIZZA
70 PIZZAS /HOUR

ALWAYS ON STOCK!

10 258 Euros

MODEL P33

3 LEVELS
9 PIZZA
90 PIZZAS /HOUR

14 063 Euros

EXTRAS

Touch screen / price per deck Max 450 degrees	580 Euros
Week timer /price per oven	160 Euros
Stand with 2 shelves and cators / price per oven	880 Euros
Hood / price per oven	280 Euros
High temp 500 degrees /Price per deck	360 Euros
Biscotti di Sorrento stones /Price per deck	465 Euros

MADE IN SWEDEN

MORA OVENS AB
LILLEBOVÄGEN 1 ,54965 SKÖVDE ,SWEDEN
+46 500 435 000 / INFO@MORAOVENS.SE

CE

MORA OVENS

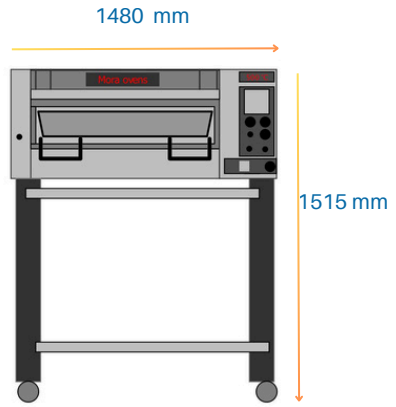

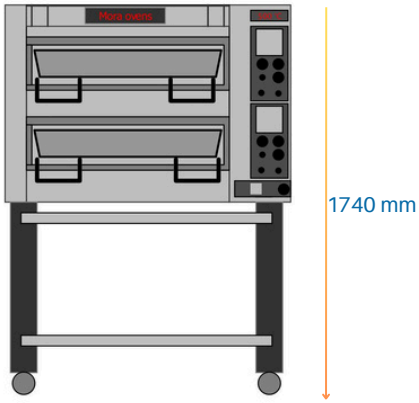

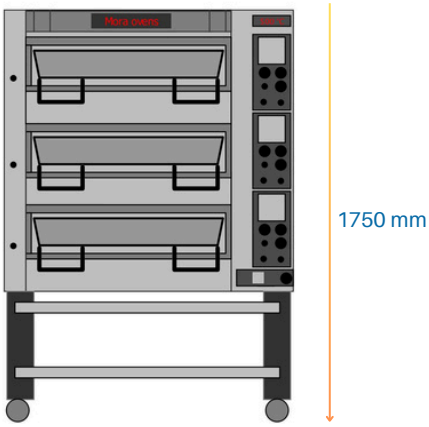

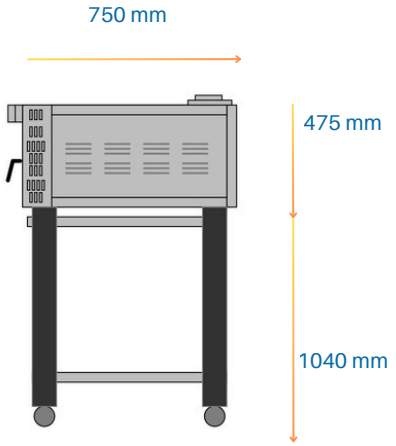

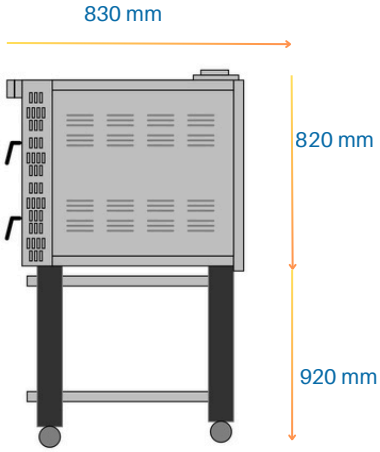

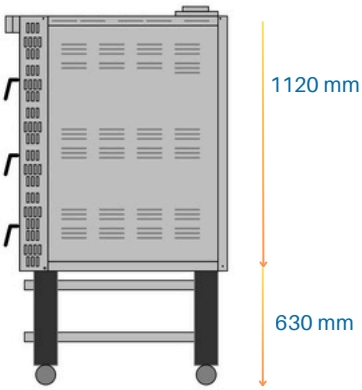

Model	Decks	Voltage -Power	Stones	Baking surface	Max temp
P31	1	3f/400v/7,3 Kw	3	1x1065x540	0-400 °C 0-500 °C
P32	2	3f/400v/14,6 Kw	6	2x1065x540	0-400 °C 0-500 °C
P33	3	3f/400v/21,9 Kw	9	3x1065x540	0-400 °C 0-500 °C

MADE IN SWEDEN

MORA OVENS AB
LILLEBOVÄGEN 1 ,54965 SKÖVDE ,SWEDEN
+46 500 435 000 / INFO@MORAOVENS.SE

CE

MORA OVENS

Export pricelist Euro

P40 SMALL 125 CM WIDE

4 PIZZOR 40 CM

- 4+4 Pizza a 40 cm or 1 Pizza a 52 cm per Deck
- Dimentions WD 1250x1020 baking surface 820X820 mm
- Can be ordered as High temp.

MODEL P41

1 LEVEL
5 PIZZA
60 PIZZAS / HOUR

7 560 Euros

MODEL P42

2 LEVELS
8 PIZZA
120 PIZZAS / HOUR

ALWAYS ON STOCK!

10 258 Euros

MODEL P43

3 LEVELS
12 PIZZA
180 PIZZAS / HOUR

13 701 Euros

EXTRAS

Touch screen / price per deck Max 450 degrees	580 Euros
Week timer /price per oven	160 Euros
Stand with 2 shelves and cators / price per oven	880 Euros
Hood / price per oven	280 Euros
High temp 500 degrees / Price per deck	360 Euros
Biscotti di Sorrento stones /Price per deck	360 Euros

MADE IN SWEDEN

MORA OVENS AB
LILLEBOVÄGEN 1 ,54965 SKÖVDE ,SWEDEN
+46 500 435 000 / INFO@MORAOVENS.SE

CE

MORA OVENS

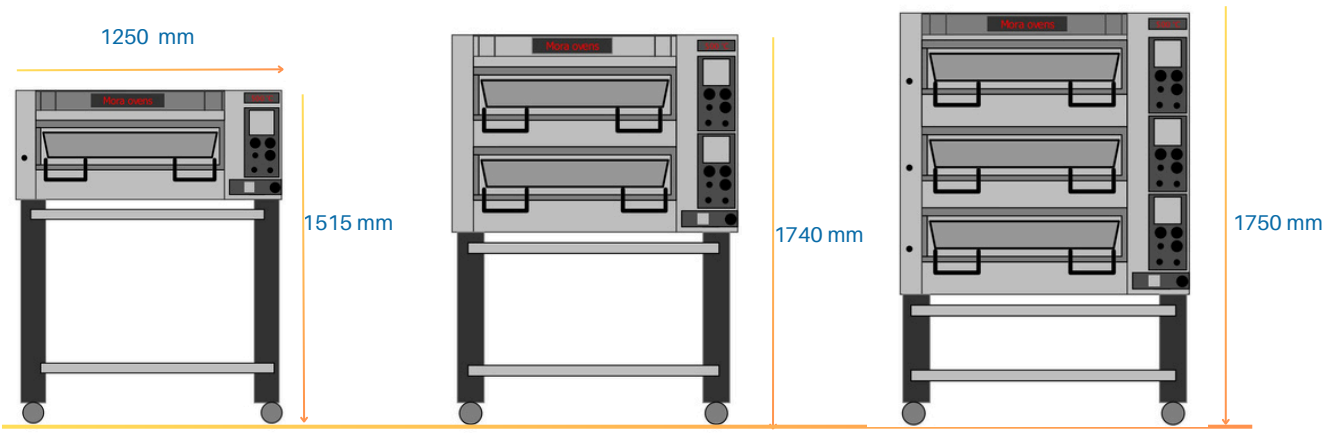

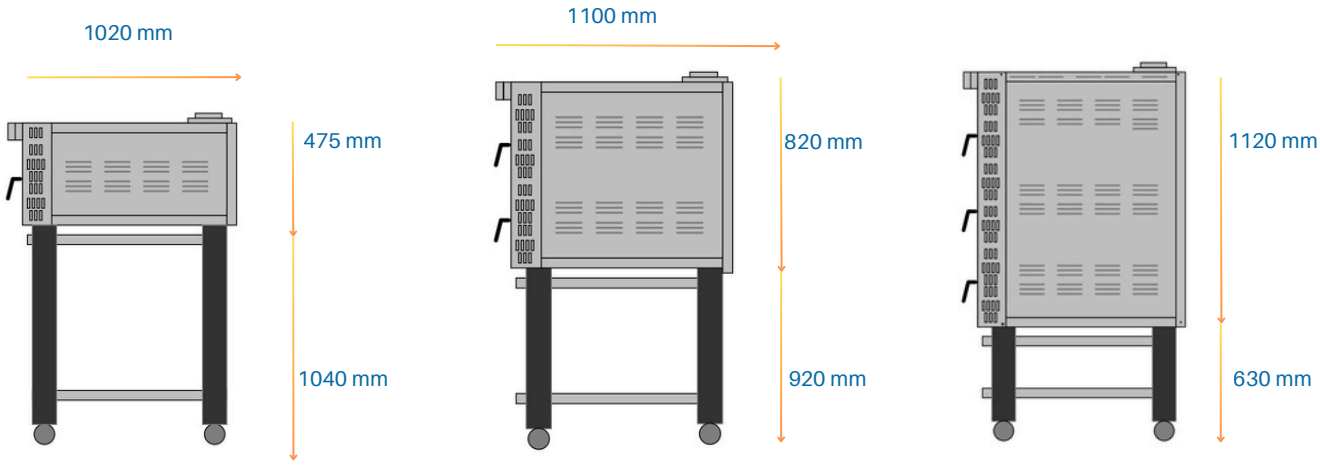

Model	Decks	Voltage -Power	Stones	Baking surface	Max temp
P41	1	3f/400v/9,4 Kw	2	1x820x820	0-400 °C 0-500 °C
P42	2	3f/400v/19,8 Kw	4	2x820x820	0-400 °C 0-500 °C
P43	3	3f/400v/28,2 Kw	6	3x820x820	0-400 °C 0-500 °C

MADE IN SWEDEN

MORA OVENS AB
LILLEBOVÄGEN 1 ,54965 SKÖVDE ,SWEDEN
+46 500 435 000 / INFO@MORAOVENS.SE

CE

MORA OVENS

Export pricelist Euro

P50S SMALL

- 6 Pizza a 30 cm or 2 Pizza a 45 cm per Deck
- Dimentions WD 1380 x920 baking surface **960 x740 mm**
- Can be ordered as High temp.

6 PIZZA 30 CM

MODEL P51 S

1 LEVEL
4 PIZZA
60 PIZZAS/HOUR

6 874 Euros

MODEL P52 S

2 LEVELS
8 PIZZA
120 PIZZAS/HOUR

ALWAYS ON STOCK!

9 938 Euros

MODEL P53 S

3 LEVELS
12 PIZZA
180 PIZZAS/HOUR

12 838 Euros

EXTRAS

Touch screen / price per deck Max 450 degrees	580 Euros
Week timer /price per oven	160 Euros
Stand with 2 shelves and cators / price per oven	880 Euros
Hood / price per oven	280 Euros
High temp 500 degrees /Price per deck	360 Euros
Biscotti di Sorrento stones /Price per deck	420 Euros

MADE IN SWEDEN

MORA OVENS AB
LILLEBOVÄGEN 1 ,54965 SKÖVDE ,SWEDEN
+46 500 435 000 / INFO@MORAOVENS.SE

CE

MORA OVENS

Export pricelist Euro

P50L LARGE

- 5 Pizza a 35 cm or 12 Pizza a 45 cm per Deck
- Dimentions WD 1380 x1020 mm baking surface **960x820 mm**
- Can be ordered as High temp.

5 PIZZA 35 CM

MODEL P51L

1 LEVEL
5 PIZZA
70 PIZZAS/HOUR

7 874 Euros

MODEL P52L

2 LEVELS
4 PIZZA
140 PIZZAS/HOUR

ALWAYS ON STOCK!

10 738 Euros

MODEL P53L

3 LEVELS
6 PIZZA
200 PIZZAS/HOUR

14 469 Euros

EXTRAS

Touch screen / price per deck Max 450 degrees	580 Euros
Week timer /price per oven	160 Euros
Stand with 2 shelves and cators / price per oven	880 Euros
Hood / price per oven	280 Euros
High temp 500 degrees /Price per deck	360 Euros
Biscotti di Sorrento stones /Price per deck	420 Euros

MADE IN SWEDEN

MORA OVENS AB
LILLEBOVÄGEN 1 ,54965 SKÖVDE ,SWEDEN
+46 500 435 000 / INFO@MORAOVENS.SE

CE

MORA OVENS

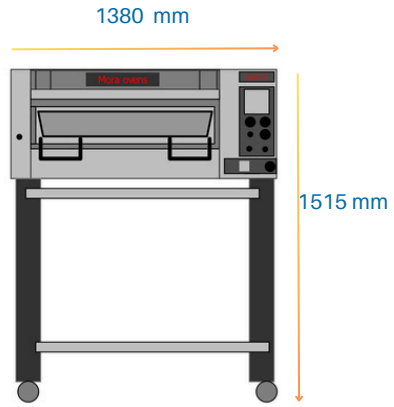

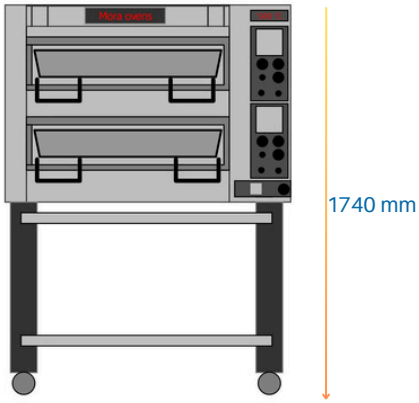

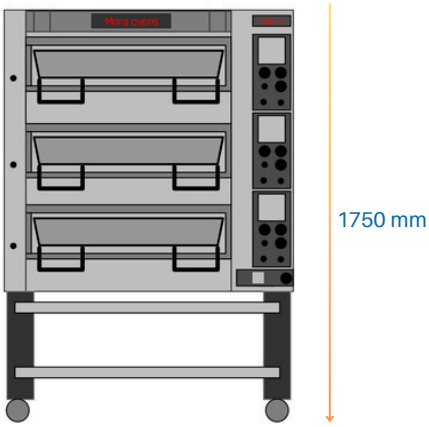

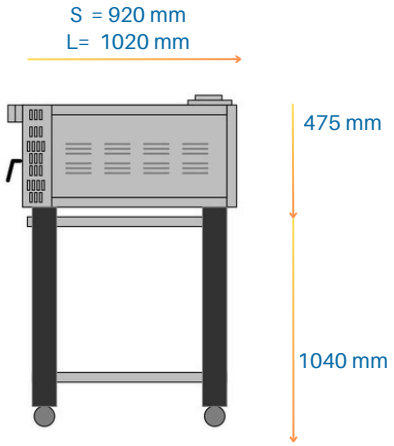

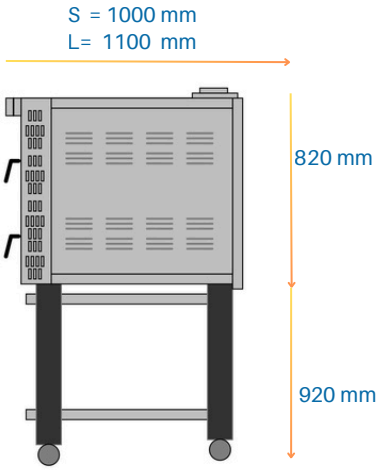

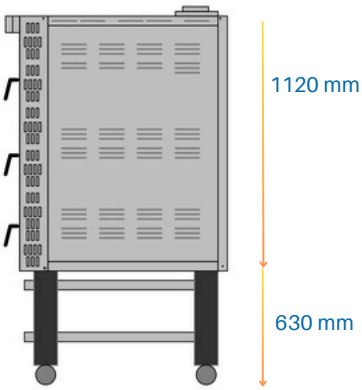

Model	Decks	Voltage -Power	Stones	Baking surface	Max temp
P51S **P51 L**	1	3f/400v/8,0 Kw 3f/400v/10,2 Kw	2	1x960740 mm 1X960X820 mm	0-400 °C 0-500 °C
P52S **P52L**	2	3f/400v/14,6 Kw 3f/400v/20,4 Kw	4	2x960740 mm 2X960X820 mm	0-400 °C 0-500 °C
P53S **P53L**	3	3f/400v/21,9 Kw 3f/400v/30,6 Kw	6	3x960740 mm 3X960X820 mm	0-400 °C 0-500 °C

MADE IN SWEDEN

MORA OVENS AB
LILLEBOVÄGEN 1,54965 SKÖVDE,SWEDEN
+46 500 435 000 / INFO@MORAOVENS.SE

CE

MORA OVENS

Export pricelist Euro

P60 MULTIPURPOSE MODEL

- 6 Pizza a 38 cm or 2 Pizza a 52 cm per Deck
- Dimentions WD 1480x920 baking surface 1060X740 mm
- Can be ordered as High temp.

6 PIZZA 35 CM

MODEL P61

1 LEVEL
6 PIZZA
80 PIZZAS/HOUR

8 451 Euros

MODEL P62

2 LEVELS
12 PIZZA
160 PIZZAS/HOUR

ALWAYS ON STOCK!

11 161 Euros

MODEL P63

3 LEVELS
12 PIZZA
180 PIZZAS/HOUR

15 104 Euros

EXTRAS

Touch screen / price per deck Max 450 degrees	580 Euros
Week timer /price per oven	160 Euros
Stand with 2 shelves and cators / price per oven	880 Euros
Hood / price per oven	280 Euros
High temp 500 degrees /Price per deck	360 Euros
Biscotti di Sorrento stones /Price per deck	465 Euros

MADE IN SWEDEN

MORA OVENS AB
LILLEBOVÄGEN 1 ,54965 SKÖVDE ,SWEDEN
+46 500 435 000 / INFO@MORAOVENS.SE

CE

MORA OVENS

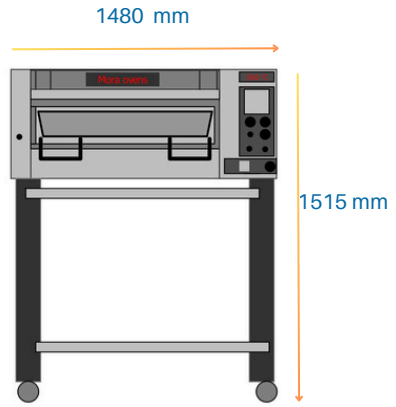

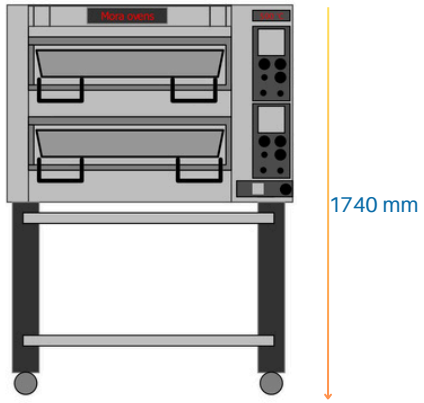

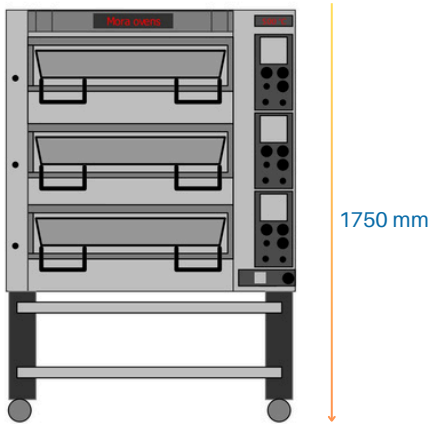

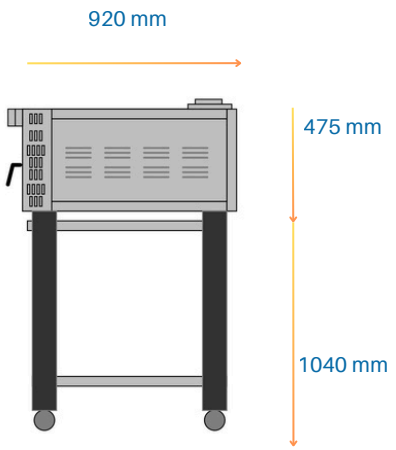

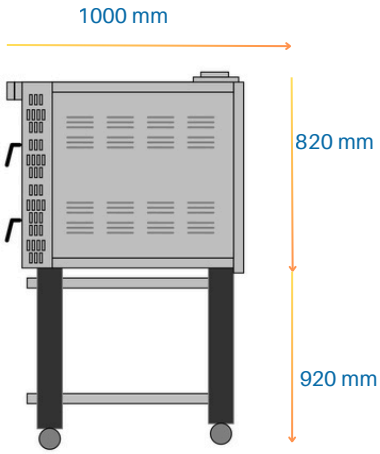

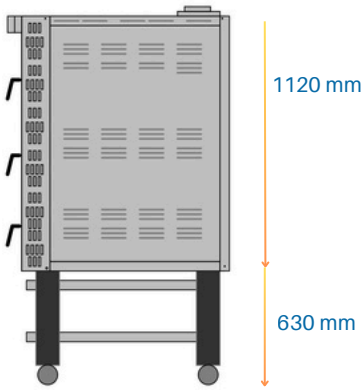

Model	Decks	Voltage -Power	Stones	Baking surface	Max temp
P61	1	3f/400v/10,6 Kw	3	1x1065x740	0-400 °C 0-500 °C
P62	2	3f/400v/21,2 Kw	6	2x1065x740	0-400 °C 0-500 °C
P63	3	3f/400v/31,8 Kw	9	3x1065x740	0-400 °C 0-500 °C

MADE IN SWEDEN

MORA OVENS AB
LILLEBOVÄGEN 1,54965 SKÖVDE,SWEDEN
+46 500 435 000 / INFO@MORAOVENS.SE

CE

MORA OVENS

Export pricelist Euro

P70L EXTRA WIDE EXTRA DEEP

6 PIZZA 40 CM

- 6 Pizza a 40cm or 2 Pizza a 52 cm per Deck
- Dimentions WD 1680x10200 baking surface 1240X820mm
- Can be ordered as High temp.

MODEL P71

1 LEVEL
6 PIZZA
100PIZZAS/HOUR

9 012Euros

MODEL P72

2 LEVELS
12 PIZZA
200 PIZZAS/HOUR

ALWAYS ON STOCK!

12 094 Euros

MODEL P73

3 LEVELS
12 PIZZA
300 PIZZAS/HOUR

16 399 Euros

EXTRAS

Touch screen / price per deck Max 450 degrees	580 Euros
Week timer /price per oven	160 Euros
Stand with 2 shelves and cators / price per oven	880 Euros
Hood / price per oven	280 Euros
High temp 500 degrees /Price per deck	360 Euros
Biscotti di Sorrento stones /Price per deck	544 Euros

MADE IN SWEDEN

MORA OVENS AB
LILLEBOVÄGEN 1 ,54965 SKÖVDE ,SWEDEN
+46 500 435 000 / INFO@MORAOVENS.SE

CE

MORA OVENS

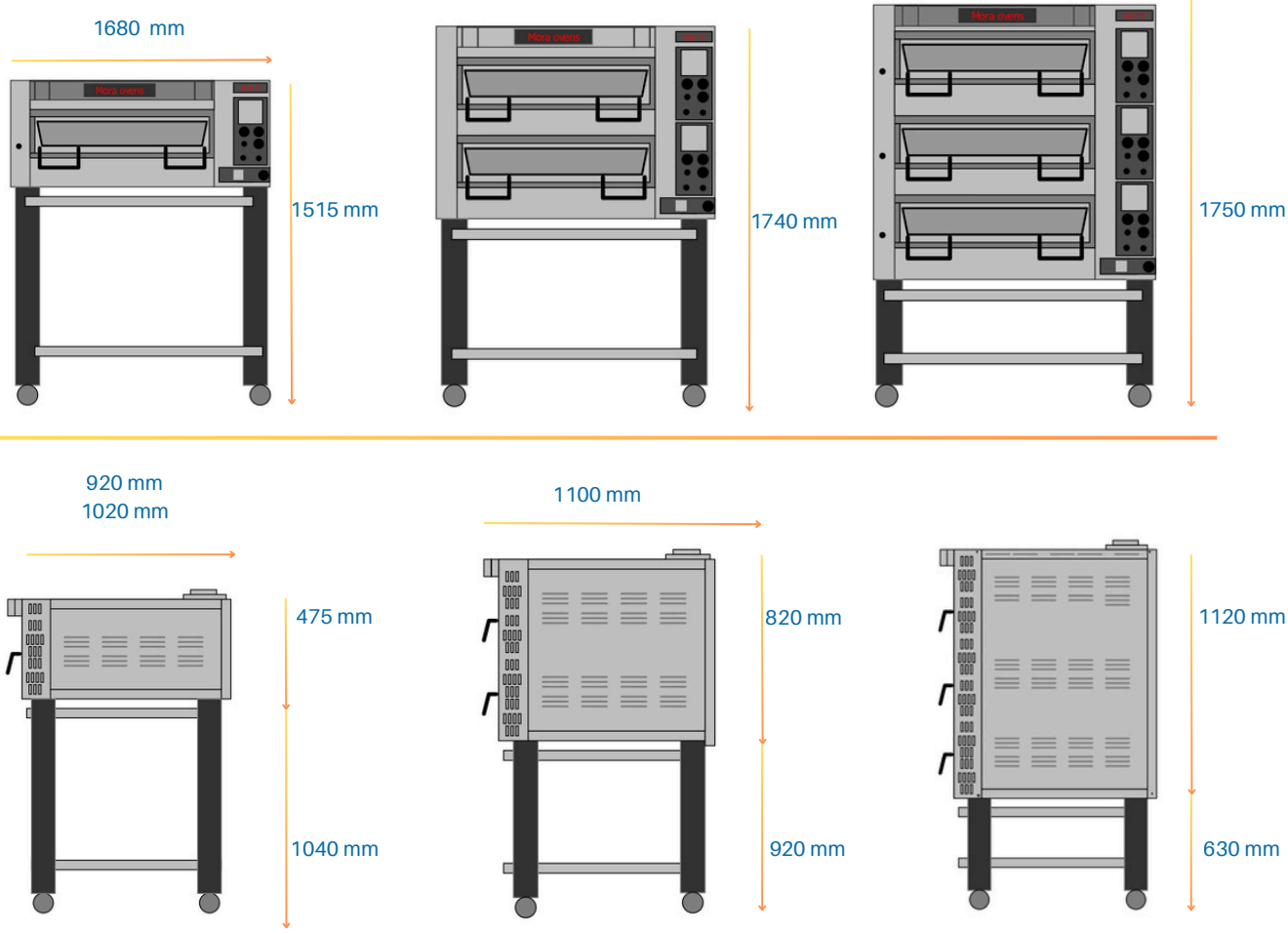

Model	Decks	Voltage -Power	Stones	Baking surface	Max temp
P71	1	3f/400v/13 Kw	3	1x1240x820	0-400 °C 0-500 °C
P72	2	3f/400v/26 Kw	6	2x1240x820	0-400 °C 0-500 °C
P73	3	3f/400v/39 Kw	9	3x1240x820	0-400 °C 0-500 °C

MADE IN SWEDEN

MORA OVENS AB
LILLEBOVÄGEN 1 ,54965 SKÖVDE ,SWEDEN
+46 500 435 000 / INFO@MORAOVENS.SE

CE

MORA OVENS

Export pricelist Euro

P80 EXTRA WIDE

- 8 Pizza a 35 cm or 2 Pizza a 52 cm per Deck
- Dimentions WD 1820x920 baking surface 1420X740mm

8 PIZZA 35 cm

MODEL P81

1 LEVELS
8 PIZZA
120 PIZZAS/HOUR

9 493 Euros

MODEL P82

2 LEVELS
16 PIZZA
240 PIZZAS/HOUR

ALWAYS ON STOCK!

12 765 Euros

MODEL P83

3 LEVELS
24 PIZZA
300 PIZZAS/HOUR

17 626 Euros

EXTRAS

Touch screen / price per deck Max 450 degrees	580 Euros
Week timer /price per oven	160 Euros
Stand with 2 shelves and cators / price per oven	980 Euros
Hood / price per oven	280 Euros
High temp 500 degrees /Price per deck	360 Euros
Biscotti di Sorrento stones /Price per deck	724 Euros

MADE IN SWEDEN

MORA OVENS AB
LILLEBOVÄGEN 1 ,54965 SKÖVDE ,SWEDEN
+46 500 435 000 / INFO@MORAOVENS.SE

CE

MORA OVENS

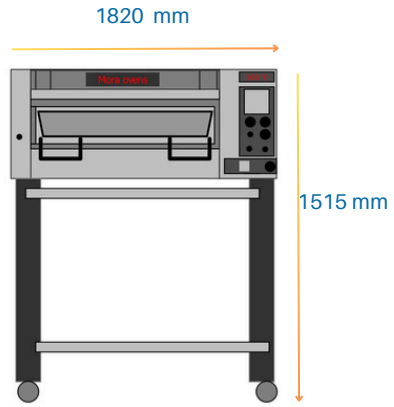

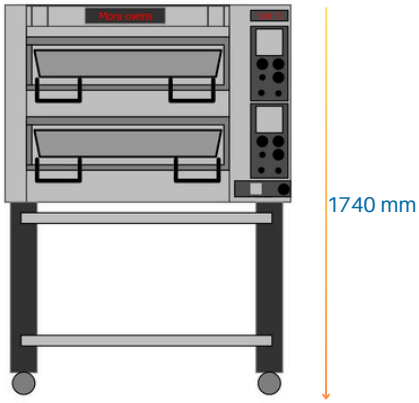

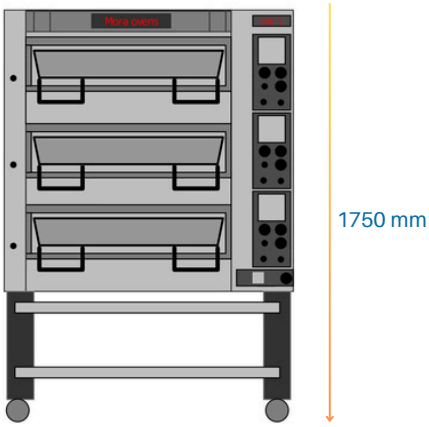

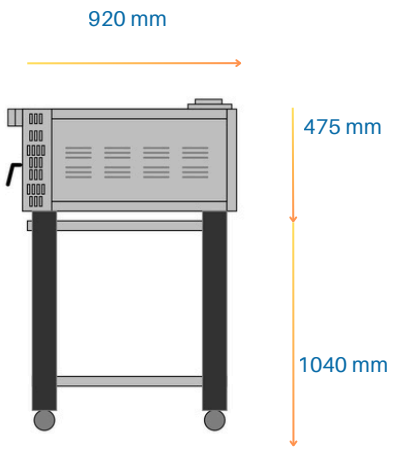

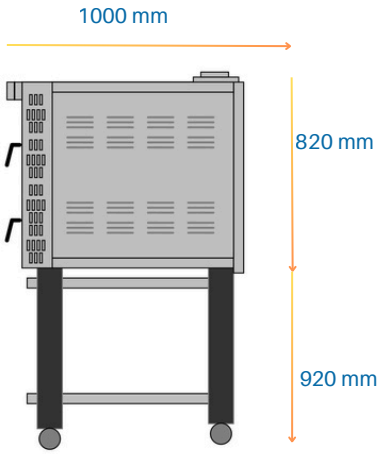

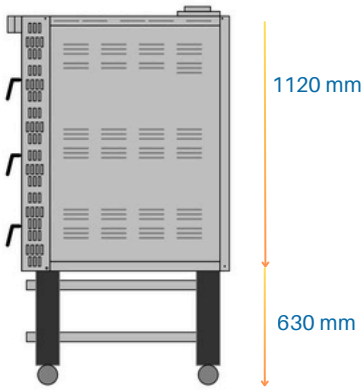

Model	Decks	Voltage -Power	Stones	Baking surface	Max temp
P81	1	3f/400v/13 Kw	4	1x1420x740	0-400 °C 0-500 °C
P82	2	3f/400v/26 Kw	8	2x1420x740	0-400 °C 0-500 °C
P83	3	3f/400v/39 Kw	12	3x1420x740	0-400 °C 0-500 °C

MADE IN SWEDEN

MORA OVENS AB
LILLEBOVÄGEN 1 ,54965 SKÖVDE ,SWEDEN
+46 500 435 000 / INFO@MORAOVENS.SE

CE

MORA OVENS

Export pricelist Euro

P90 X WIDE /X DEEP

- 8 Pizza a 40 cm or 3 Pizza a 52 cm per Deck
- Dimentions WD 2080x1020 baking surface 1653X820mm

8 PIZZA 40 cm

MODEL P91

1 LEVEL
8 PIZZA
120 PIZZAS /HOUR

13 079 Euros

MODEL P92

2 LEVELS
16 PIZZA
240 PIZZAS /HOUR

17 526 Euros

MODEL P93

3 LEVELS
24 PIZZA
300 PIZZAS /HOUR

22 283 Euros

EXTRAS

Touch screen / price per deck Max 450 degrees	580 Euros
Week timer /price per oven	160 Euros
Stand with 2 shelves and cators / price per oven	980 Euros
Hood / price per oven	280 Euros
High temp 500 degrees /Price per deck	360 Euros
Biscotti di Sorrento stones /Price per deck	764 Euros

MADE IN SWEDEN

MORA OVENS AB
LILLEBOVÄGEN 1 ,54965 SKÖVDE ,SWEDEN
+46 500 435 000 / INFO@MORAOVENS.SE

CE

MORA OVENS

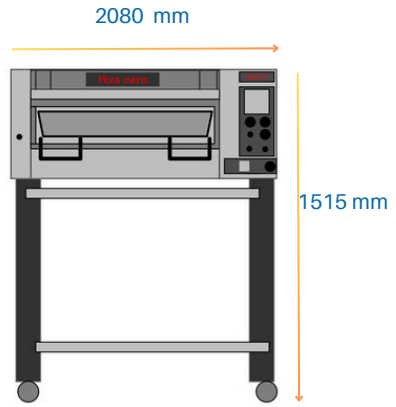

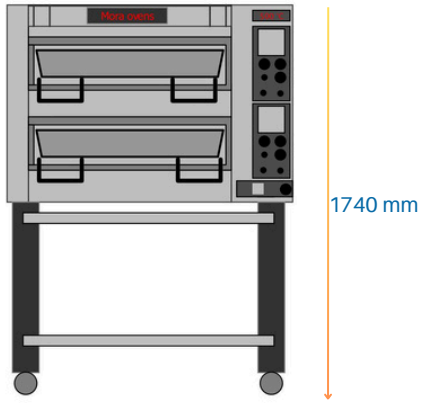

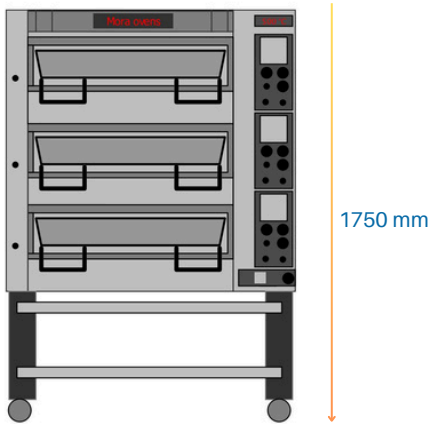

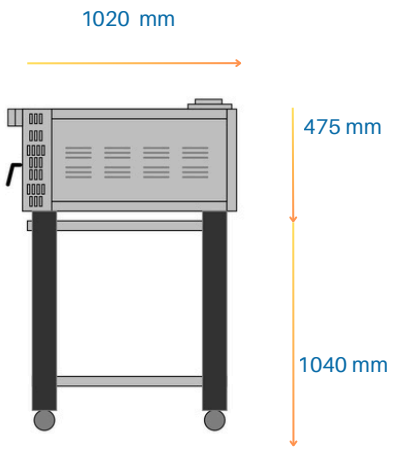

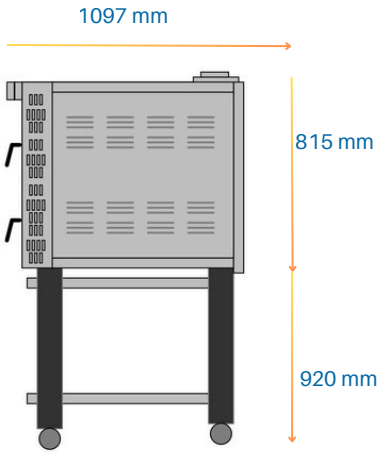

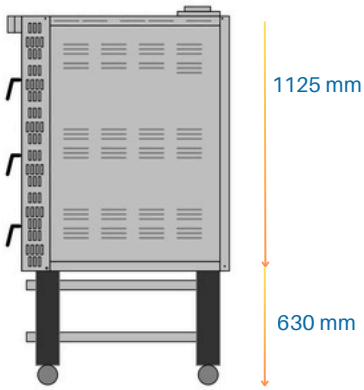

Model	Decks	Voltage -Power	Stones	Baking surface	Max temp
P91	1	3f/400v/16,4 Kw	4	1x1420x820	0-400 °C
P92	2	3f/400v/32,8 Kw	8	2x1420x820	0-400 °C
P93	3	3f/400v/49,2 Kw	12	3x1420x820	0-400 °C

MADE IN SWEDEN

MORA OVENS AB
LILLEBOVÄGEN 1 ,54965 SKÖVDE ,SWEDEN
+46 500 435 000 / INFO@MORAOVENS.SE

CE

MORA OVENS

Export pricelist Euro

CUSTOMER CARE HELPDESK

- 2 YEARS SPARE PARTS WARRANTY
- FULL CUSTOMER SERVICE IN SWEDISH, ENGLISH AND FRENCH

QUALITY FEATURES

- EVERY OVEN IS TESTED BEFORE EXPORT
- TEST PROTOCOL IS INCLUDED WITH EVERY OVEN SOLD

PACKAGING

- WOOD CRATE PACKAGING IS INCLUDED

MADE IN SWEDEN

MORA OVENS AB
LILLEBOVÄGEN 1,54965 SKÖVDE,SWEDEN
+46 500 435 000 / INFO@MORAOVENS.SE

CE

Sales

- Sweden / Partner
- Scandinavia /Partner
- Europe /Partner+Direct
- Orient /Direct
- Oceania /Direct
- Asia /Direct
- Africa /Direct
- South America /Direct
- Noth America /Direct

Become a Reseller

- Attractiv products
- Fast production time
- Good warranties
- Reliable products
- Good add on value

MORA OVENS AB

LILLEBOVÄGEN 1 ,54965 SKÖVDE ,SWEDEN

+46 500 435 000 / INFO@MORAOVENS.SE

MADE IN SWEDEN

CE